DRAINAGE & WASTE WATER PUMPS
ST SERIES 415V

CLEARTEC PUMPS

2 YEAR WARRANTY

T&Cs apply

ST10-24JM / ST10-24JA

Heavy duty submersible drainage & waste water pump ideal for agricultural drainage & irrigation, building storm water /subsoil removal & drainage bilge water.

- Durable cast iron outer casing for superior heat transfer.
- Balanced impeller
- In built auto reset motor protector.
- Side discharge.
- Standard 10 mts power cable.

Mechanical Seal	Double Silicon carbide upper & lower faces
Impeller	Semi Open
Motor Protection	Klixon auto reset
Pump Configuration	Free standing. Guide Rail.
Liquid Temp	≤ 40 °C
Voltage	3 Phase 415V

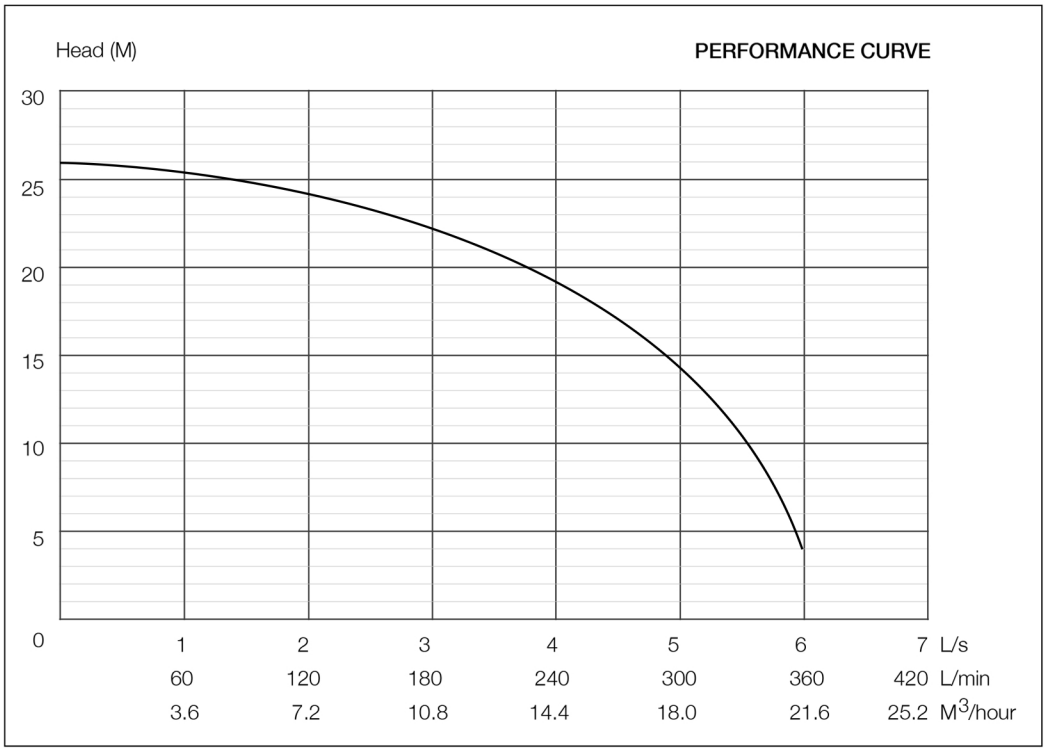

Pump Dimensions

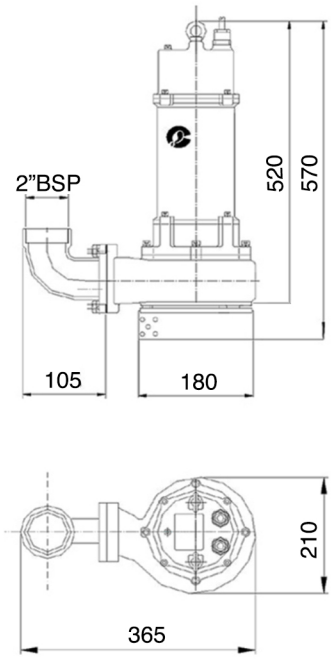

ST10-24 1.5Kw 415V

MODEL NO	Discharge (mm)	Max Flow (L/s)	Max Head (m)	Output (Kw)	Voltage (V)	FLC (A)	RPM	Solid size (mm)	Weight (Kg)	Insulation Class
ST10-24JM	50	6	26	1.5	415	3.7	2900	7	38	F
ST10-24JA	50	6	26	1.5	415	3.7	2900	7	38	F

M (manual) A (automatic) J (semi-open impeller)

PICTURES ARE FOR ILLUSTRATIVE PURPOSES ONLY
DISCLAIMER: EVERY EFFORT HAS BEEN MADE TO PUBLISH CORRECT DETAILS .
NO RESPONSIBILITY WILL BE TAKEN FOR ERRORS OR CHANGES IN PRODUCT SPECIFICATION.

DATE: 12.11.20

Clear Industry P/L
1/4 Whitehead Court, Glendenning NSW 2761
T: 02 9675 6381
E: clearindustry@optusnet.com.au
W: www.cleartecpumps.com.au